J26171

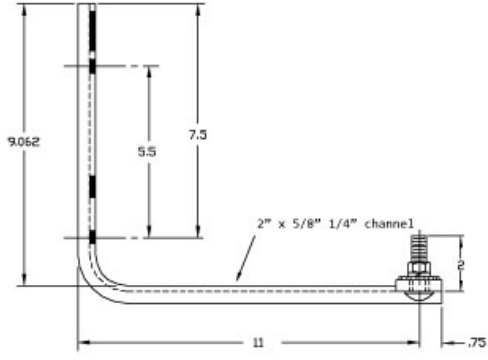
9.062
5.5
7.5
2" x 5/8" 1/4" channel
2
11
.75

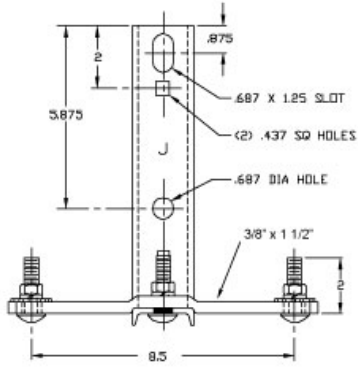
.875
2
5.875
.687 X 1.25 SLOT
(2) .437 SQ HOLES
.687 DIA HOLE
3/8" x 1 1/2"
2
8.5